BOURDON TUBE PRESSURE GAUGE FOR CHEMICAL INDUSTRY AAORDING TO DIN EN 837-1

Nominal size NS 63
Connection position bottom centric or excentric back with or without glycerine filling

These all stainless steel pressure gauges are designed for harsh conditions and to meet the stringent demands of pressure measurement in production plants of the chemical industry and in other comparable industrial sectors. The use of high quality materials such as stainless steel, both for the measuring system and case, provides resistance to aggressive media and environments. The glycerine filling provides smooth pointer motion, thus ensuring an accurate reading even under extreme load and strong vibration conditions.

Type	6030	6031	6032	6033	Options
Nominal size	63				
Symbol			with glycerine filling		other filling materials
					Type 6031 and 6033 Connection centric back
Accuracy acc. to DIN EN 837-1	Class 1,6; Class 2,5 ranges 0/600 and 0/1000 bar				higher measurement accuracy
Measuring ranges	0/0,6 up to 0/1000 bar, negative or positive overpressure				
Case	Stainless steel, bajonet ring, with blow out				1.4404 on request
Wetted parts	Bordon tube stainless steel 316L (1.4404)				
Connection material	Stainless steel 316L (1.4404)				
Thread	G 1/4 B				1/4“NPT, M12x1,5 others on request
Connection position	bottom	eccentric back	bottom	eccentric back	radial at 3:00, 9:00, 12:00 o´clock (6030/6032) centric back (6031/6033)
Window	Safety class				
Movement	Stainless steel				
Dial	Aluminium white, scale and lettering black				Special scale
Pointer	Aluminium black				
Temperatures	Storage: -20°C up to +70°C Ambient: -40°C up to +60°C Medium: up to +200°C		Storage: -20°C up to +70°C Ambient: -20°C up to +60°C Medium: up to +80°C		Medium up to +300°C (only unfilled devices!) Medium up to +100°C filled devices
Protection class DIN EN 60 529/ IEC 529	IP54		IP65 (closed blowout)		high protection rate eg. IP 65 without case filling
Mounting optional	Rear flange Front flange				
More options	Free of grease and oil Orifice Ø0,3, Ø0,6 mm				
Weight approx. unfilled filled	0,08 kg 0,09 kg	0,08 kg 0,09 kg	0,09 kg 0,13 kg	0,09 kg 0,13 kg	

Dimensional drawing

Dimensions in mm

DRUCK & TEMPERATUR

Type 6030, 6032

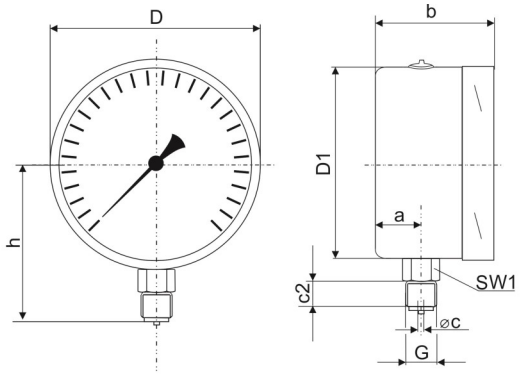

Type 6031, 6033

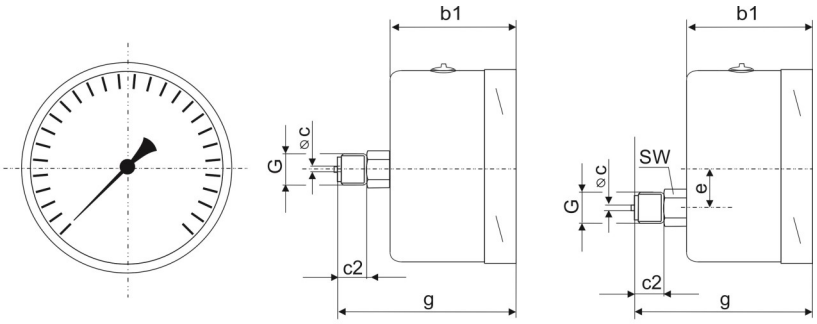

With rear flange for Panel mounting

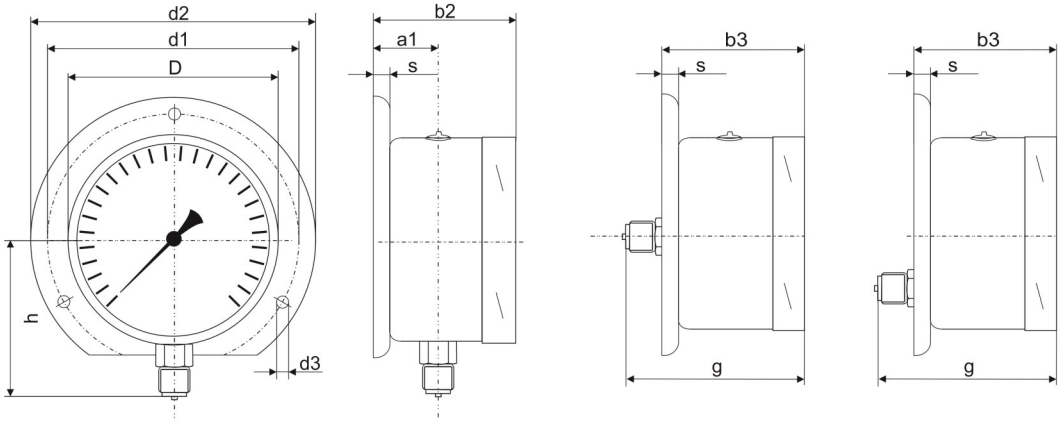

With front flange for panel mounting

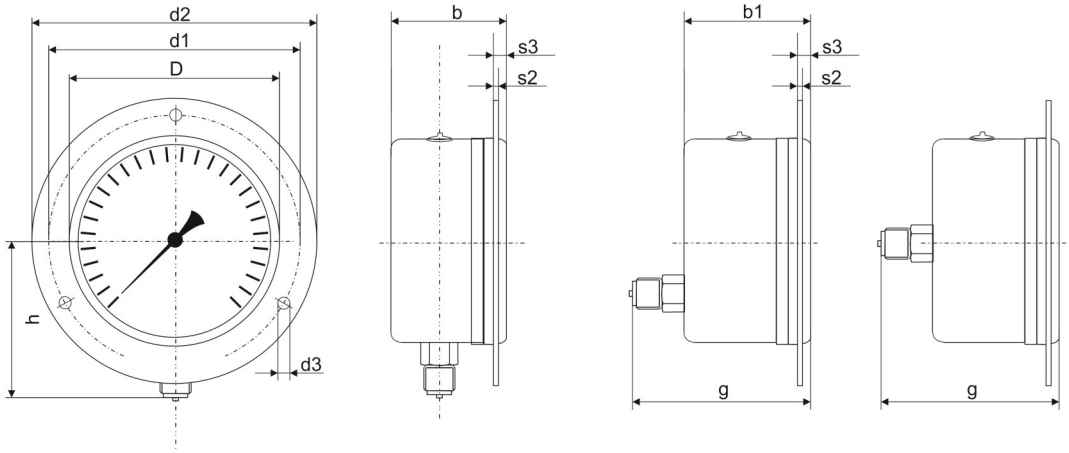

Type	NS	a	a1	b	b1	b2	b3	c	c2	D	d1	d2	d3	e	G	g	h	s	s2	s3	SW	Weight
6030	63	10	13	33	-	36	-	5	13	64	75	85	3,6	-	G¼B	-	54	5	2	5,5	14	0,18 kg
6031	63	-	-	-	37	-	40	5	13	64	75	85	3,6	18	G¼B	59	-	5	2	5,5	14	0,18 kg
6032	63	10	13	33	-	36	-	5	13	64	75	85	3,6	-	G¼B	-	54	5	2	5,5	14	0,25 kg
6033	63	-	-	-	37	-	40	5	13	64	75	85	3,6	18	G¼B	59	-	5	2	5,5	14	0,25 kg

SUKU Druck- und Temperaturmesstechnik GmbH

Garnsdorfer Hauptstraße 109 • 09244 Lichtenau / Sachsen - GERMANY

Tel.: +49 37208 / 2717 • Fax: +49 37208 / 61713 • contact@suku.de • www.suku.de

© 2020 SUKU Druck- und Temperaturmesstechnik GmbH.

The specifications given in this document represent the state of engineering at the time of publishing. We reserve the right to make modifications to the specifications and materials.